DC Submersible pumps for drainage

Clear waters

Civil use

Industrial use

※ **High-quality materials and robust construction ensure superior performance and reliability**

PERFORMANCE RANGE

- Flow rate up to **550 l/min** (33 m³/h)
- Head up to **38 m**

INSTALLATION AND USE

DC submersible pumps are constructed from thick cast iron, offering exceptional robustness, abrasion resistance, and longevity. Perfect for **draining both clear and slightly dirty water**, their durability and reliability set them apart. Designed for automated fixed installations, the **DC** series guarantees continuous operation, even in conditions where they are not fully submerged.

INCLUDES

※ Power cable length **10 m**
※ Float switch (exclusive to single-phase models)
※ Switchbox compatible with DCm42, DCm43 (exclusive to single-phase models)

APPLICATION LIMITS

- Maximum operating depth below water level up to **10 m** (with an appropriately sized power cable)
- Liquid temperature up to **+40 °C**
- Capable of processing suspended solids up to **Ø 10 mm**
- Draining capability up to 25 mm
- Minimum immersion for continuous service: **300 mm**

AVAILABLE UPON REQUEST

※ Different voltage requirements 60 Hz frequency

WARRANTY

※ **The warranty for the three-phase models remains valid only if the motor's built-in thermal protector is properly connected to the control panel. This connection is essential for the warranty's applicability**

PATENTS - TRADE MARKS - MODELS

- Patent No. IT0001428923
- Registered Community Model No. 002501486-0001

CURVES AND PERFORMANCE DATA

50 Hz

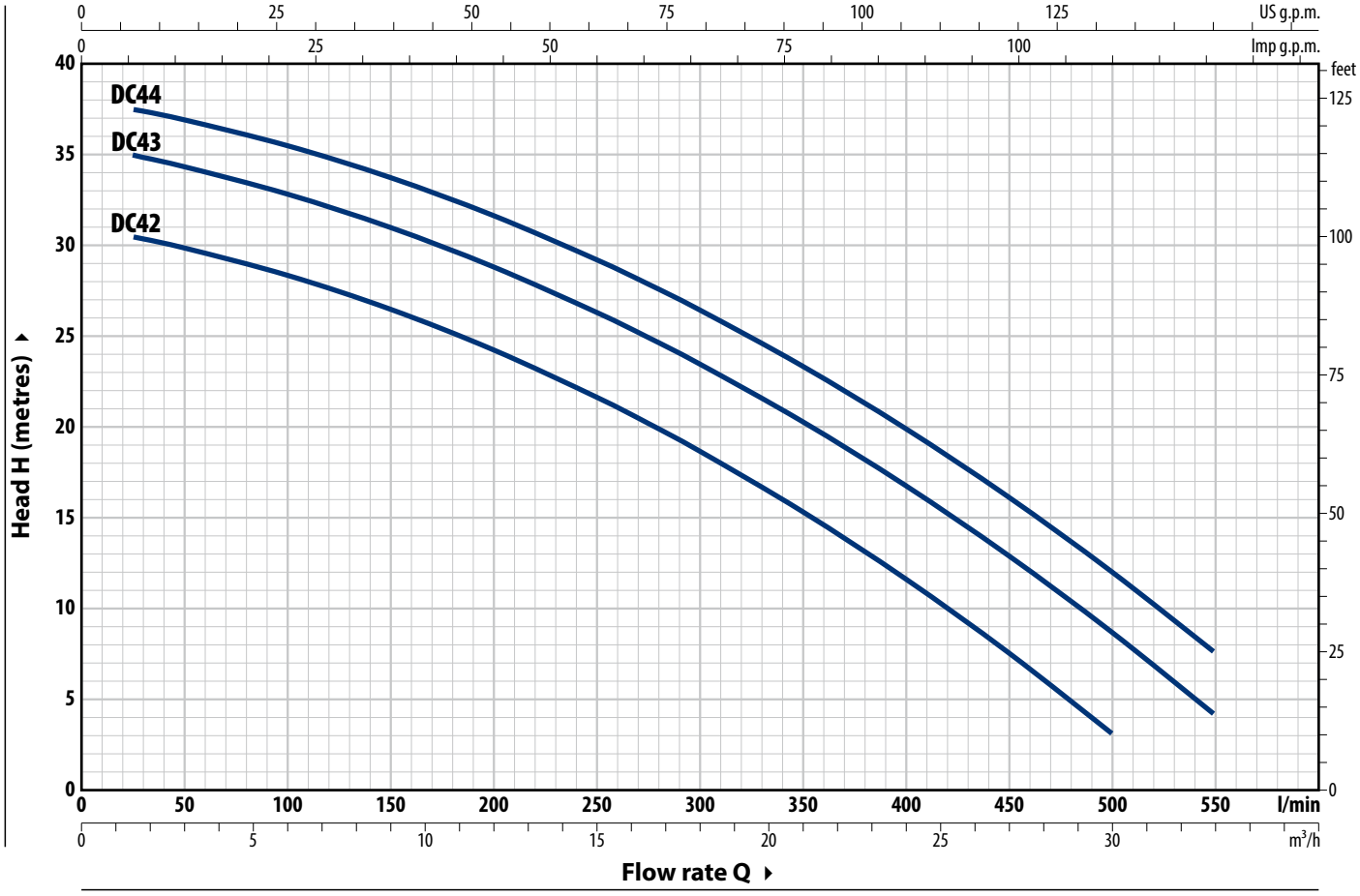

MODEL		POWER (P2)		Q	m³/h	0	1.5	3.0	6.0	9.0	12.0	15.0	18.0	21.0	24.0	27.0	30.0	33.0
Single-phase	**Three-phase**	**kW**	**HP**		l/min	**0**	**25**	**50**	**100**	**150**	**200**	**250**	**300**	**350**	**400**	**450**	**500**	**550**
DCm 42	**DC 42**	1.5	2			31	30.5	30	28.4	26.5	24.3	21.6	18.6	15.3	11.6	7.5	3	
DCm 43	**DC 43**	2.2	3	**H**	m	35.5	35	34.4	33	31	28.8	26.3	23.5	20.3	16.7	12.8	8.5	4
–	**DC 44**	3	4			38	37.5	37	35.5	33.7	31.6	29.2	26.4	23.3	20	16	12	7.5

Q = Flow rate **H** = Total manometric head

Performance curves comply with EN ISO 9906 Grade 3B tolerance limits.

ABSORPTION

MODEL **Single-phase**	VOLTAGE **230 V**
DCm 42	13.0 A
DCm 43	16.0 A

MODEL **Three-phase**	VOLTAGE **400 V**
DC 42	5.2 A
DC 43	6.2 A
DC 44	6.8 A

DIMENSIONS AND WEIGHT

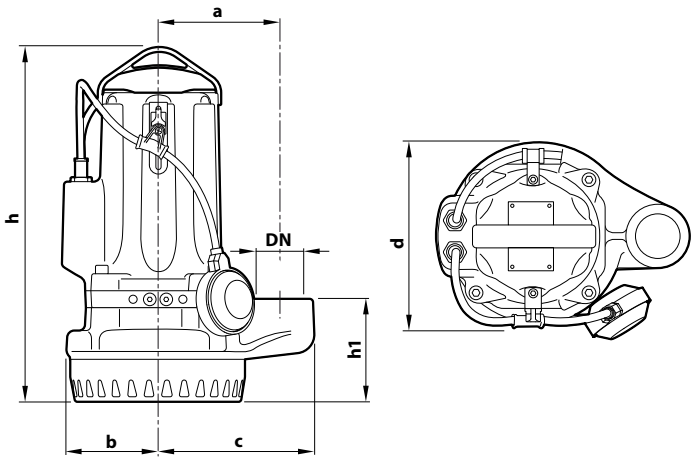

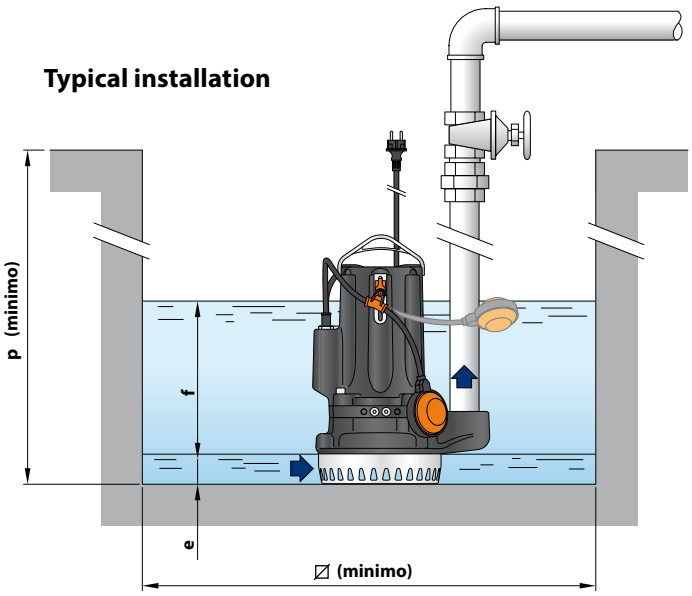

MODEL		PORT	DIMENSIONS mm										kg	
Single-phase	**Three-phase**	**DN**	a	b	c	d	h	h1	e	f	p	⌀	1~	3~
DCm 42	**DC 42**	**2"**	150	112	190	230	434	125	25	adjustable	800	800	42.0	41.0
DCm 43	**DC 43**						460 | 434						47.0	42.0
–	**DC 44**						460						–	47.0

PALLET CAPACITY

MODEL		NO. OF PUMPS
Single-phase	**Three-phase**	n. of pumps
DCm 42	**DC 42**	16
DCm 43	**DC 43**	16
–	**DC 44**	16

CONSTRUCTION FEATURES

1	**Pump body**	Cast iron with cataphoresis
2	**Grid**	Stainless steel **AISI 304**
3	**Cover**	Cast iron with cataphoresis
4	**Impeller**	Stainless steel **AISI 304** micro-cast
5	**Motor holder**	Cast iron with cataphoresis
6	**Motor cover**	Cast iron with cataphoresis
7	**Motor shaft**	Stainless steel **AISI 431**

8 Double mechanical seal with interposed oil chamber

Seal	Shaft	Location	Materials
STA-24	Ø 24 mm	Motor side	Ceramic / Graphite / NBR
STA-22 SIC	Ø 22 mm	Pump side	SiC / SiC / NBR

9 Electric motor

DCm :single-phase 230 V - 50 Hz
with thermal motor protection

DC: three-phase 400 V - 50 Hz
with winding integrated thermal motor protection to be connected to the control panel

– Insulation: class F

– Protection rating: IP X8

10 Power cord

Type "H07 RN-F"
(Schuko plug exclusive to single-phase models)

※ Standard length 10 metres

11 Float switch
(exclusive to single-phase models)

12 Switch cabinet
(exclusive to single-phase models)

13 Tilting device for the float cable
(exclusive to single-phase models)
Patent n. IT0001428923
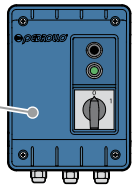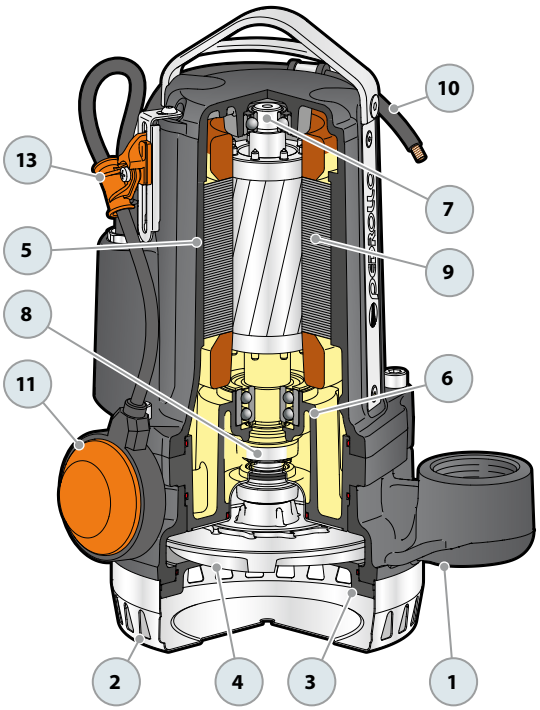
Switch cabinet
(exclusive to single-phase